SCV VALVE
Innovative Valve Solutions®

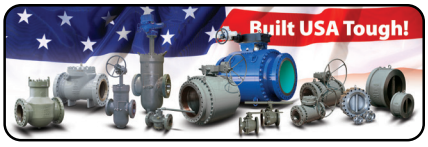

(281) 482-4728 · www.scvvalve.com

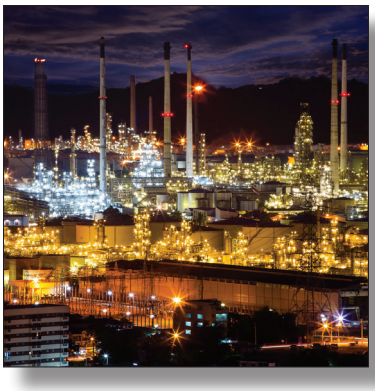







Rising Stem Ball Valves - API 6D & B16.34

Class: 150 - 2500
Sizes: 2” - 18”



SCV VALVE

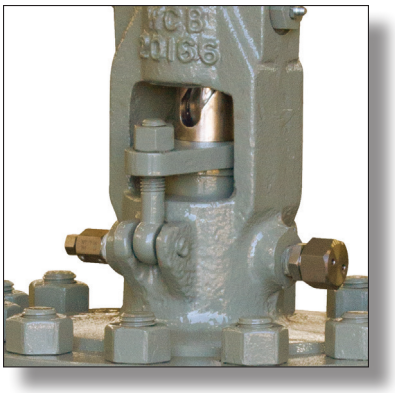

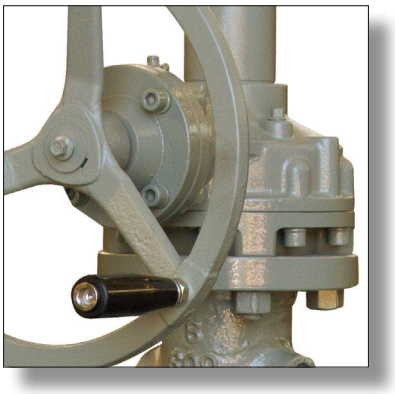





SCV VALVE manufactures superior cast body, rising stem ball valves in a variety of materials, trims, packing types, sizes (2" thru 20") and pressure classes (150 thru 2500). The mechanical characteristics make the SCV rising stem ball valve is ideal for ?????????????.

The valve design conforms to API 61. Face-to-face and end-to-end dimensions conform to ANSI B16.5 and B16.25.

Innovative Valve Solutions.®

SCV Bolted Bonnet Globe Valves

[Product Preview]

For more information call us @ (281) 482-4728 or visit our website @ www.scvvalve.com

Rising Stem Ball Valve - API 6D

- Basic Design: API 6D
- Inspection & Testing: API 6D
- Face-to-Face: API 6D
- Shell Wall Thickness: API 6D
- Fire Safe Design: API 6FA/BS 6755
- Flange Dimensions: ANSI/ASME B16.5
- Butt-Weld End Dimensions: ANSI/ASME B16.25



Note: SCV reserves the right to change any technical design and dimensional data without prior notice. Please contact SCV to confirm all Dimensions and Data offered in this catalog.

SCV VALVE

SCV Valve's product lines include commodity valves as well as specialty valves in all sizes, pressure classes & metallurgy; including carbon steel, stainless steel & exotic alloys. The valve types include:

- Thru Conduit Gates - Slab & Expanding Gate Designs
- 3-Piece Trunnion Mounted Balls
- Floating Balls
- Wedge Gates
- Globes
- Full Port Swing Checks
- Piston Checks
- Rising Stem Balls
- Pressure Balanced Lubricated Plugs

SCV Valve's high quality standards demand 100% pressure testing of every valve to insure its reliability and full customer satisfaction. We pride ourselves with high quality products, timely deliveries, and competitive prices.

Company History

The SCV valve brand was established in 1972. The primary focus of the Company was to provide full inline field service for valve maintenance as well as in house valve modifications. While serving the Power Industry, Paper & Pulp, Oil & Gas, and the Petro Chemical Industry; through years of dedication and commitment to quality and service, SCV had become one of the largest full range, field service companies, with a reputation for superior quality.

In the mid 1970s, the SCV brand entered the valve manufacturing industry, primarily serving the Power Industry. Since that time, the SCV brand has expanded its products to cover a broad range of valves. SCV Valve holds the API 6A & API 6D Monogram, API Q1 Quality Management System, and ASME "R" stamp. The manufacturing facility, sales and projects office is located in Santa Fe, Texas.

Mission Statement

SCV Valve is committed to consistently providing products that meet or exceed customer and regulatory specifications. SCV Valve aims to enhance customer satisfaction through implementing the highest levels of quality standards while assuring full conformity to those requirements.

Table of Contents

Page

Table of Contents 1
Complete Product Line 2
Certifcations 3
- American Petroleum Institute (API)
- ISO 9001:2008
- Canadian Registration Numbers
- CE PED

Figure Number Chart ..... 4 & 5
Valve ID Tag & Valve Markings Identification 6

RISING STEM BALL VALVES - API 6D ..... 7 THRU 14
Expanded View 8
- Class 150 - Rising Stem Ball Valves - 2" thru 18" 9
- Class 300 - Rising Stem Ball Valves - 2" thru 20" 10
- Class 600 - Rising Stem Ball Valves - 2" thru 20" 11
- Class 900 - Rising Stem Ball Valves - 2" thru 16" 12
- Class 1500 - Rising Stem Ball Valves - 2" thru 12" 13
- Class 2500 - Rising Stem Ball Valves - 2" thru 8" 14

Pressure Temperature Ratings ..... 15, 16, & 17
Flange Dimensions ..... 18 & 19
Industry Standards for Valve Manufacturing 22
Terms and Conditions 23

Complete Product Line

Call SCV Valve today @ (281) 482-4728 for all your valve needs or visit us on the web @ www.scvvalve.com.

THRU CONDUIT GATES - SLAB & EXPANDING

Design: API 6D
Sizes: 2" - 42"
Class: 150 - 1500
Standard stock.

Design: API 6A
Sizes: 9", 11" & 13-5/8"
Pressure: 2000, 3000, 5000
Limited inventory availability.
All sizes and pressure
classes made to order.

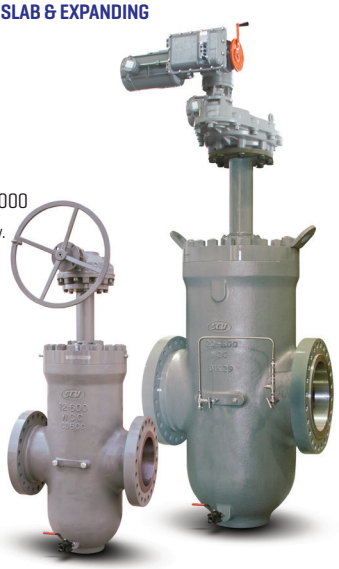

PISTON CHECKS

Design: API 6D
Sizes: 2" - 24"
Class: 150 - 2500
Standard stock.



GLOBES

Design: API 623
Sizes: 2" - 24"
Class: 150 - 2500
Limited inventory availability.
All sizes and pressure
classes made to order.



3-PIECE TRUNNION BALLS

Design: API 6D
Sizes: 2" - 42"
Class: 150 - 2500
Standard stock.

Design: API 6A
Sizes: 2-1/16" - 7-1/6""
Pressure: 2000, 3000, 5000
Limited inventory availability.
All sizes and pressure
classes made to order.

Bore Coating: Scotchkote™ 134



FULL PORT SWING CHECKS

Design: API 6D
Sizes: 2" - 36"
Class: 150 - 2500
Standard stock.



Exterior Coating: Epoxy

WEDGE GATES

Design: API 600
Sizes: 2" - 48"
Class: 150 - 2500
Limited inventory availability. All sizes
and pressure classes made to order.



FLOATING BALLS

Design: B16.34
Sizes: 1/2" - 12"
Class: 150 - 1500
Standard stock.

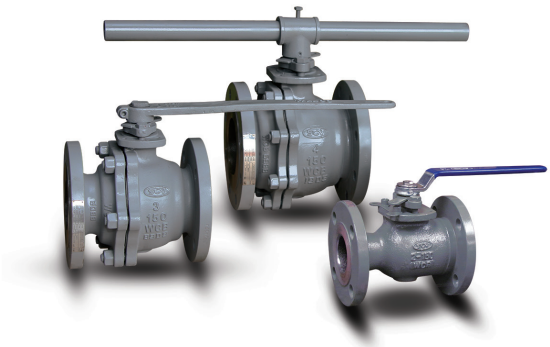

PRESSURE BALNCED LUBRICATED PLUGS

Design: API 6D
Sizes: 2" - 36"
Class: 150 - 2500
Standard stock.



RISING STEM BALLS

Design: API 6D
Sizes: 2" - 18"
Class: 150 - 2500
Standard stock.



Certifications & Registrations

American Petroleum Institute (API)

API 6A Certification



Certificate of Authority to use the Official API Monogram
License Number: 6A-1190 ORIGINAL

The American Petroleum Institute hereby grants to

SCV VALVE
3521 FM 646 Road North
Santa Fe, TX
United States

the right to use the Official API Monogram® on manufactured products under the conditions in the official publications of the American Petroleum Institute entitled API Spec Q1® and **API-6A** and in accordance with the provisions of the License Agreement.

In all cases where the Official API Monogram is applied, the API Monogram shall be used in conjunction with this certificate number: **6A-1190**

The American Petroleum Institute reserves the right to revoke this authorization to use the Official API Monogram for any reason satisfactory to the Board of Directors of the American Petroleum Institute.

The scope of this license includes the following: Gate, Ball, Plug Valves at PSL 1, PSL 2

QMS Exclusions: No Exclusions Identified as Applicable

Effective Date: DECEMBER 6, 2025
Expiration Date: DECEMBER 6, 2028

To verify the authenticity of this license, go to www.api.org/compositelist.

Senior Vice President of Global Industry Services

American Petroleum Institute

2018-151 | Digital

Note: Extension letter available on our website.

API 6D Certification



Certificate of Authority to use the Official API Monogram
License Number: 6D-1099 ORIGINAL

The American Petroleum Institute hereby grants to

SCV VALVE
3521 FM 646 Road North
Santa Fe, TX
United States

the right to use the Official API Monogram® on manufactured products under the conditions in the official publications of the American Petroleum Institute entitled API Spec Q1® and **API-6D** and in accordance with the provisions of the License Agreement.

In all cases where the Official API Monogram is applied, the API Monogram shall be used in conjunction with this certificate number: **6D-1099**

The American Petroleum Institute reserves the right to revoke this authorization to use the Official API Monogram for any reason satisfactory to the Board of Directors of the American Petroleum Institute.

The scope of this license includes the following: Check Valves, Ball Valves, Plug Valves, Gate Valves

QMS Exclusions: No Exclusions Identified as Applicable

Effective Date: DECEMBER 6, 2025
Expiration Date: DECEMBER 6, 2028

To verify the authenticity of this license, go to www.api.org/compositelist.

Senior Vice President of Global Industry Services

American Petroleum Institute

2018-151 | Digital

Note: Extension letter available on our website.

ISO 9001:2015 Certificate



ABS Quality Evaluations
An ABS Group Company

ABS Quality Evaluations Certification

Certificate Of Conformance

This is to certify that the Quality Management System of:

SCV Valve, LLC

3521 FM 646 Road North
Santa Fe TX
77510
United States

has been assessed by ABS Quality Evaluations, Inc. and found to be in conformance with the requirements set forth by:

ISO 9001:2015

The Quality Management System is applicable to:

Engineering, Manufacturing, Sales, and Service of High Performance Valve Products. Product Range includes all Severe Service & High Pressure Applications

Certificate No:	44703
Certification Date:	16 JUN 2010
Effective Date:	01 MAY 2025
Expiration Date	15 JUN 2028
Revision Date:	01 MAY 2025

Dominic Townsend, President

ANAB IAF

This certificate's validity is subject to the organization maintaining their system in accordance with ABS Quality Evaluations, Inc. 1701 City Plaza Dr Spring, TX 77389 USA requirements for management system certification. It is contingent upon prompt, written notification to ABS Quality Evaluations, Inc. of significant changes to the management system or components thereof. Validity may be confirmed by accessing the website (www.abs-qe.com) or scanning the code to the right with a smartphone. For certificates issued in the People's Republic of China information may also be verified on the Certification and Accreditation Administration of the People's Republic of China's website (www.cnca.gov.cn).
The certificate remains the property of ABS Quality Evaluations, Inc. to whom it must be returned upon request.

Copyright as of the Effective Date, ABS Quality Evaluations, Inc. All rights reserved. Rev1

CE PED Certificate



HPiVS

Certificate of Quality System Approval

This is to certify that the product listed below conforms to the requirements of the
Pressure Equipment Directive 2014/68/EU
Annex III Module H

Certificate Number	HPiVS-IP1012-055-Q-01-00
Date of Issue	24-Oct-2024
Date of Expiry	24-Oct-2027
Manufacturer	SCV Valve, LCC 3521 FM 646 Rd. North Santa Fe, Texas 77510
Description of Pressure Equipment	Ball Valves, Check Valves, Gate Valves and Plug Valves Class 150 - 2500. Group 1 fluids
Equipment Identification	CE Nameplate on each cat.I, II, III valve
Type of material	see certificate schedule
Other Certification	ISO 9001:2015 certificate no. 44703 issued by ABS Quality Evaluation
Standards Applied	see certificate schedule
Report Reference	HPiVS-IP1012-055-1

This Certificate is valid in any European Economic Area Member State.
This Report has been issued by HPi Verification Services (Ireland) Ltd. which is a body notified to the European Commission according to the provisions of the Pressure Equipment Directive (Notified Body number 2810).
This Report is issued following the assessment of the documentation and implementation of the Quality System in accordance with the provisions of the quoted Conformity Assessment Module of the above directive. The CE Mark must be affixed to the Pressure Equipment within the scope of approval as described above once the EU 'declaration of conformity' has been signed by the responsible person. The number '2810', being HPi Verification Services (Ireland) Ltd. Notified Body number must also be placed on the equipment dataplate.
This certificate is subject to annual surveillance audits. If the surveillance audits are not held, this certificate may be suspended or withdrawn. The current status of the certificate can be checked by scanning the QR code.

Check this certificate is genuine

Quality Director

Technical Director

An INAB accredited Certification Body Reg. No. 5018.

CE

EU Notified Body No. 2810
Company registered in Ireland #577786

© HPi Verification Services (Ireland) Ltd. 2024

Tel +353 (0)1 8017000
Email enquiries@hpivs.ie
www.hpivs.ie

HPi Verification Services (Ireland) Ltd.
Clonross
Dunshaughlin, Co.Meath
A85 XN59, Ireland

Canadian Registration Number

- Alberta - 0C07063.2
- New Brunswick - 0C07063.27
- Northwest Territory - 0C07063.25
- Nunavut - 0C07063.2N
- Ontario - 0C07063.25
- Yukon - 0C07063.2
- British Columbia - 0C07063.21
- NewFoundland&Laborador - 0C07063.20
- Novascotia - 0C07063.27
- Manitoba - 0C07063.24
- Prince Edward island - 0C07063.29

SCV Figure Number Chart

Note: SCV Figure Chart is subject to change without notice.

1	2	3	4	5	6	7	8
Valve Type	**Bore Size**	**Class**	**Body/Bonnet Conf.**	**Body Material**	**Obturator Material**	**Ends**	**Operator**
BAL = Trunnion Ball Valve	50 = 1/2"	01 = 150	B = Bolted	02 = A352 LCC	01 = A352 LLC + 410	A = RF x WE	/ = N/A
CEG = Compact Expanding Gate Valve	75 = 3/4"	03 = 300	L = Lug Style	06 = A351 CF8M	02 = A352 LCC + ENP	B = RTJ x WE	B = Bare Stem
DCK = Dual Plate Check Valve	01 = 1"	04 = 400	P = Pressure Seal	08 = A216 WCC	06 = A216 WCC + ENP	D = RF x RTJ	D = Dual Acting Actuator
EPG = Expanding Gate Valve	15 = 1-1/2"	06 = 600	S = Seal Weld	10 = A216 WCB	09 = A351 CF8M	E = RTJ x RF	E = Electric Actuator
FBV = Floating Ball Valve	02 = 2"	09 = 900	T = Top Entry	11 = A352 LCB	10 = A216 + CR13	J = RTJ	G = Gear
FCK = Full Port Swing Check Valve	21 = 2-1/16"	15 = 1500	U = Union	12 = A350 LF2	11 = CR13 HF	K = WE x RF	H = Handwheel
GAT = Wedge Gate Valve	25 = 2-1/2"	20 = 2000		13 = A105	12 = A105 + CR13	L = WE x RTJ	I = Linear Actuator
GLB = Globe Valve	27 = 2-9/16"	25 = 2500		16 = A217 WC6	13 = A105 + ENP	R = RF	L = Lever
PCK = Piston Check Valve	03 = 3"	30 = 3000		30 = A29 4130	14 = A694 Gr. F60 + ENP	W = WE	
PLG = Lubricated Plug Valve	31 = 3-1/8"	50 = 5000		36 = A182 316	15 = A350 LF2 + ENP		
PSG = Parallel Slide Gate Valve	37 = 3-9/16"	10 = 10000		51 = A182 F51 Duplex	16 = A216 WCC + 316		
RSB = Rising Stem Ball Valve	04 = 4"			55 = A182 F55 Duplex	17 = 17-4 PH		
SCK = Conv. Port Swing Check Valve	41 = 4-1/16"			60 = A216 WCC + Inconel 625	20 = A216 WCB + Ni65		
TCG = Slab Gate Valve	05 = 5"			87 = A487 4C	23 = A182 316L + Stellite 21		
	51 = 5-1/8"			88 = A890-4A	34 = A182 304		
	06 = 6"				35 = A182 316 HF		
	71 = 7-1/16"				36 = A182 316		
	08 = 8"				41 = A182 F6A Class 2		
	09 = 9"				42 = A182 F6A + Nitride		
	10 = 10"				51 = A182 F51 Duplex		
	23 = 10-3/8"				52 = A351 CF8M + Stellite 6		
	11 = 11"				54 = A182 F51 Duplex + CoCr-A		
	12 = 12"				59 = A352 LCC + Stellite 6		
	19 = 12-3/8"				60 = A105 + HF		
	13 = 13-5/8"				61 = A105 + Nitride + Stellite 6		
	14 = 14"				62 = A105 + Inconel 625		
	16 = 16"				69 = A350 LF2 + Tungsten Carbide		
	17 = 16-3/4"				73 = A182 410 +Tungsten Carbide		
	18 = 18"				81 - A350 LF2 + Nitride + HF		
	20 = 20"				85 = A743 CA15 + Nitride		
	22 = 22"				88 = A890-4A		
	24 = 24"				96 = A216 WCB + CR13		
	26 = 26"						
	28 = 28"						
	30 = 30"						
	32 = 32"						
	34 = 34"						
	36 = 36"						
	38 = 38"						
	40 = 40"						
	42 = 42"						
	48 = 48"						
	52 = 52"						
	56 = 56"						
	60 = 60"						

9	10	11	12	13	14	15
Bore Type	**Seal Material**	**Seat Material**	**Seat Insert/Overlay Material**	**Stem Material**	**Packing Material**	**Service**
F = Full Port	A = Aflas	/ = N/A	B = Nickel Boron	/ = N/A	/ = N/A	A = Stem Extension
R = Reduced Port	B = Buna	08 = A216 WCB	D = Devlon	A = A350 LF2 + ENP	B = Braided Graphoil	C = Cryogenic
C = Conventional	E = EPDM	09 = A351 CF8M	F = PTFE	B = A105 + ENP	G = Graphite	D = *DPE x DPE
T = Regular Pattern	F = Fluorosilicone	11 = CR13 HF	G = RTFE - Glass filled	C = A182 F6a Class 2	T = Teflon	E = External Coating
U = Short Pattern	G = Graphite	13 = A105 + ENP	H = Hard Face (Stellite 6)	D = 17-4 PH	V = Viton Duck	F = Dampener
V = Venturi Pattern	H = HNBR	14 = A105 + HF	K = PCTFE	F = A182 F316		G = Geothermal
	K = Kalrez	15 = A350 LF2 + ENP	N = Nylon	G = A182 F51 Duplex		H = High Temperature
	L = Lip Seal	16 = A350 LF2 + HF	P = Peek	H = A182 F56 Duplex		I = Internal Coating
	N = Neoprene	17 = 17-4 PH	R = RTFE - Carbon Filled	I = Inconel 625		J = **SPE x DPE
	P = Polyuerethane	30 = A29 4130	T = Tungsten Carbide	J = 17-4 + QPQ		L = Lock Open Device
	R = NBR	32 = A182 316L + HF	V = Viton			P = Pipe Pups
	S = Silicone	35 = A182 316/HF	3 = 316			S = Standard Service
	T = Teflon	36 = A182 316	W = UHMWE			X = Special
	U = Floursint	41 = A182 F6a Class 2				
	V = Viton	42 = A182 F6a Class 2 + HF				
	3 = 304 Ring	51 = F51 Duplex				
	4 = 304 / Graphite	52 = A182 F51 Duplex + HF				
	5 = 316 Ring	54 = A182 F51 Duplex + CoCr-A				
	6 = 316 / Graphite	55 = F55 Duplex				
	7 = Soft Iron Ring	91 = A105/HF				

Sample Figure Numbers & Descriptions

	Figure No. Chart Column	1	2	3	4	5	6	7	8	9	10	11	12	13	14	15
	Pressure Classes	**Type**	**Size**	**Class**	**Body Conf.**	**Body**	**Obturator**	**End**	**Oper**	**Bore Type**	**Seal**	**Seat.base**	**Seat/Insert**	**Stem**	**Packing**	**Service**
TRUNNION BALL	150, 300, 600	BAL	12	06	B	12	15	R	G	F	H	15	D	A	/	S
	12" 600 Trunnion Ball Valve, Bolted A350 LF2 Body, LF2 + ENP Obturator, RF Ends, Gear Operated, Full Bore, HNBR AED Seals, A350 LF2 + ENP Seat Base Material, Devlon Seat Inserts, A350 LF2 + ENP Stem, Standard Service, API 6D Design and Test, NACE MR-01-75 Compliant															
	900, 1500, 2500	BAL	12	15	B	12	41	J	G	F	H	41	D	C	/	S
	12" 1500 Trunnion Ball Valve, Bolted Configuration, A350 LF2 Body, A182 F6a Class 2 Obturator, RTJ Ends, Gear Operated, Full Bore, HNBR AED Seals, A182 F6a Class 2 Seat Base Material, Devlon Seat Inserts, A182 F6a Class 2 Stem, Standard Service, API 6D Design and Test, NACE MR-01-75 Compliant															
FLOATING BALL	ALL	FBV	12	01	B	10	36	R	L	F	3	36	R	F	/	S
	12" 150 Floating Ball Valve, Bolted Configuration, A216 WCB Body, A182 F316 Obturator, RF Ends, Lever Operated, Full Bore, A182 F316 Seat Base Material, Devlon Seat Inserts, A182 F316 Stem, Standard Service, API 608 Design, API 598 Test, NACE MR-01-75 Compliant															
DUAL PLATE WAFER CHECK	ALL	DCK	12	06	W	10	09	R	/	C	/	08	H	/	/	S
	12" 600 Dual Plate Check Valve, Wafer Configuration, A216 WCB Body, A351 CF8M Obturator, RF Ends, Conventional Bore, A216 WCB Seat Base Material, Hardface Seat Overlay, Standard Service, API 594 Design, API 598 Test, NACE MR-01-75 Compliant															
SLAB GATE	ALL	TCG	12	06	B	08	13	R	B	F	V	13	R	D	V	S
	12" 600 Thru Conduit Slab Gate Valve, Bolted A216 WCC Body, A105 + ENP Obturator, RF Ends, Bare Stem, Full Bore, Viton AED Seals, A105 + ENP Seat Base Material, RTFE Seat Inserts, 17-4 PH Stem, Viton Duck Packing, Standard Service, API 6D Design and Test, NACE MR-01-75 Compliant															
EXPANDING GATE	ALL	EPG	12	06	B	08	06	R	B	F	V	13	R	D	V	S
	12" 600 Thru Conduit Expanding Gate Valve, Bolted A216 WCC Body, A216 WCC + ENP Obturator, RF Ends, Bare Stem, Full Bore, Viton AED Seals, A105 + ENP Seat Base Material, RTFE Seat Inserts, 17-4 PH Stem, Viton Duck Packing, Standard Service, API 6D Design and Test, NACE MR-01-75 Compliant															
FULL PORT SWING CHECK	ALL	FCK	12	06	B	08	16	R	/	F	V	11	V	/	/	S
	12" 600 Full Port Swing Check Valve, Bolted A216 WCC Body, A216 WCC + 316 Obturator, RF Ends, Full Bore, Viton AED Seals, CR13 HF Seat Base Material, Viton Seat Inserts, Standard Service, API 6D Design and Test, NACE MR-01-75 Compliant															
PISTON CHECK	150, 300, 600, 900	PCK	12	06	B	08	61	R	/	C	V	14	H	/	/	S
	12" 600 Piston Check Valve, Bolted A216 WCC Body, A105 + Nitride + HF Obturator, RF Ends, Coventional Bore, Viton AED Seals, A105 Seat Base Material, Hardface Seat Overlay, Standard Service, API 6D Design and Test, NACE MR-01-75 Compliant															
	1500, 2500	PCK	12	15	B	08	61	R	/	C	V	41	H	/	/	S
	12" 1500 Piston Check Valve, Bolted A216 WCC Body, A105 + Nitride + HF Obturator, RF Ends, Coventional Bore, Viton AED Seals, A182 F6a Class 2 Seat Base Material, Hardface Seat Overlay, Standard Service, API 6D Design and Test, NACE MR-01-75 Compliant															
LUBRICATED PLUG	ALL	PLG	12	06	B	10	84	R	L	C	V	/	/	/	G	S
	12" 600 Lubricated Plug Valve, Bolted A216 WCB Body, A743 CA15 Obturator, RF Ends, Lever Operated, Coventional Bore, Viton AED Seals, Standard Service, API 6D Design and Test, NACE MR-01-75 Compliant															
WEDGE GATE	ALL	GAT	12	06	B	10	7	R	H	C	4	14	H	C	G	S
	12" 600 Wedge Gate Valve, Bolted A216 WCB Body, A216 WCB + Hardface Obturator, RF Ends, Handwheel Operated, Conventional Bore, 304 + Graphite Gasket, A105 Seat Base Material, Hardface Seat Overlay, A182 F6a Class 2 Stem, Graphite Packing, Standard Service, API 600 Design, API 598 Test, NACE MR-01-75 Compliant															
GLOBE	ALL	GLB	12	06	B	10	60	R	H	C	4	14	H	C	G	S
	12" 600 GlobeValve, Bolted A216 WCB Body, A105+ Hardface Obturator, RF Ends, Handwheel Operated, Conventional Bore, 304 + Graphite Gasket, A105 Seat Base Material, Hardface Seat Overlay, A182 F6a Class 2 Stem, Graphite Packing, Standard Service, API 623 Design, API 598 Test, NACE MR-01-75 Compliant															

Note: Subject to change without notice.

Control #: MSF 3.5-16 rev 17

Valve ID Tag & Valve Markings Identification

Valve ID Tag

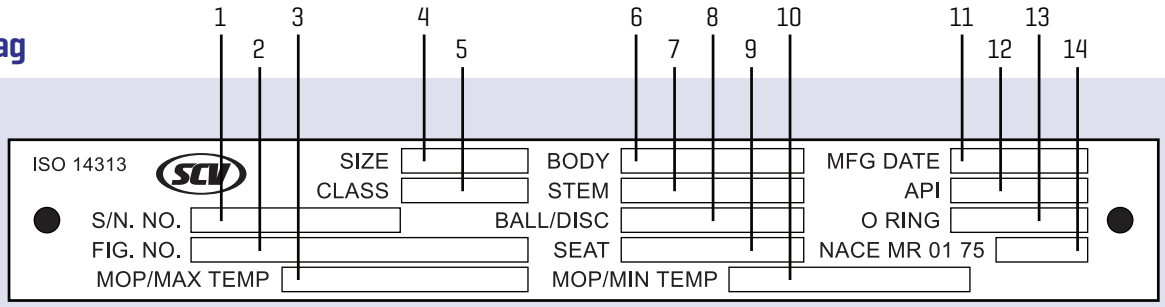

No.	Figure Number Code	Description
1	Serial Number	Identifies certified manufacturers serial number
2	Figure Number	Identifies the detailed valve configuration (valve type, bore size, pressure class, materials, etc.)
3	MOP/Max. Temp.	Identifies the maximum operating pressure in PSI and maximum operating temperature in Fahrenheit
4	Size	Identifies bore size
5	Pressure Class	Identifies pressure classifications per API requirements
6	Body Material	Identifies body metal material composition (A105, WCB, F51, CF8M, etc.)
7	Stem Material	Identifies stem material composition (A105, 410SS, 17-4pH, etc.)
8	Ball/Disc Material	Identifies ball/disc material composition (A105, 316SS, ENP, etc.)
9	Seat Material	Identifies seat material composition (PEEK, Teflon, Nylon, etc.)
10	MOP/Min. Temp.	Identifies the maximum operating pressure in PSI and minimum operating temperature in Fahrenheit
11	Manufacturing Date	Identifies the date the valve manufacturing completion date
12	API Conformance	Identifies API conformance (600, 6D, 6A, etc.)
13	O Ring	Identifies the O Ring material composition (Viton, Viton GLT, etc.)
14	NACE MR 01 75	Identifies corrosion resistance

Valve Markings

No.	Valve ID Components
1	Tag
2	Brand
3	Size
4	Pressure Class
5	Body Material
6	Heat Number

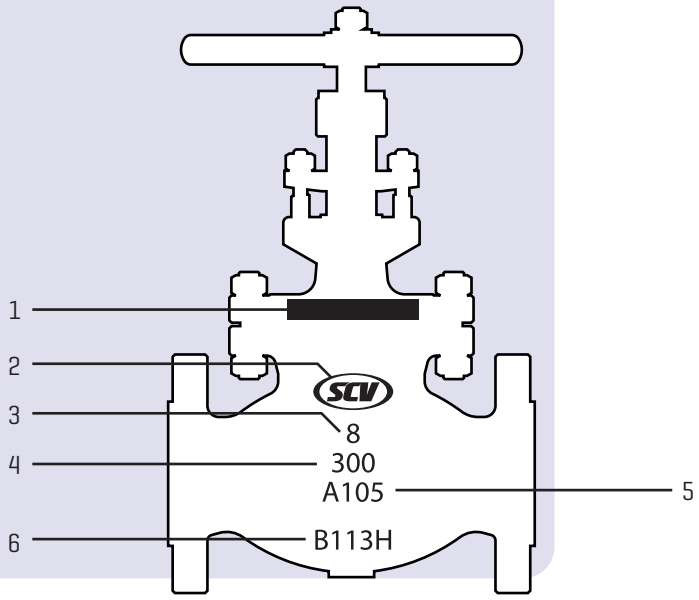

Note: SCV reserves the right to modify our products for improvement without prior notice.

SCV VALVE

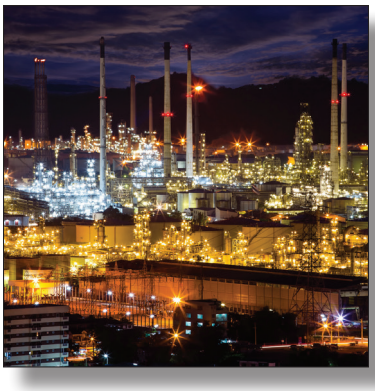







Rising Stem Ball Valves

Class: 150 - 2500/Sizes: 2” - 20”

Design and Manufacturing Standards	
Basic Design	API 6D
Wall Thickness	API 6D
Face-to-Face Dimension	API 6D
Flange End Dimension	ANSI/ASME B16.5
Butt-Weld End Dimension	ANSI/ASME B16.25
Inspection & Testing	API 6D



[Expanded View]

No	Part	Material
1		
2		
3		
4		
5		
6		
7		
8		
9		
10		
11		
12		
13		
14		
15		
16		
17		
18		
19		
20		
21		
22		

DRAWING NEEDED

Rising Stem Ball Valves
Size: 2” - 18” Class: 150

DRAWING NEEDED

CLASS 150	SIZE		END-TO-END		?	?	?	WEIGHTS LBS/KG
			A - RF	A - BW				FLANGED
	IN	2	7.0	8.50				63
	MM	50	178	216				29
	IN	3	8.0	11.63				86
	MM	80	203	295				39
	IN	4	12	14.50				187
	MM	100	305	368				85
	IN	6	15.88	20.00				382
	MM	150	403	508				173
	IN	8	18.00	23.38				529
	MM	200	457	594				240
	IN	10	26.50	26.50				1152
	MM	250	673	673				523
	IN	12	30.00	30.00				1965
	MM	300	762	762				891
	IN	14	/	30.00				1965
	MM	350	/	762				891
	IN	16	35.50	32.50				3538
	MM	400	902	826				1605
	IN	18	43.00	/				3625
	MM	450	1092	/				1644

Rising Stem Ball Valves
Size: 2” - 20” Class: 300

DRAWING NEEDED

CLASS 300	SIZE		END-TO-END		?	?	?	WEIGHTS LBS/KG
			A - RF	A - BW				FLANGED
	IN	2	8.50	8.50				73
	MM	50	216	216				33
	IN	3	11.13	11.63				97
	MM	80	282	295				44
	IN	4	12.00	14.50				211
	MM	100	305	368				96
	IN	6	15.88	20.00				391
	MM	150	403	508				177
	IN	8	19.75	23.38				579
	MM	200	502	594				263
	IN	10	26.50	26.50				1227
	MM	250	673	673				557
	IN	12	30.00	30.00				2059
	MM	300	762	762				934
	IN	14	32.50	32.50				2202
	MM	350	826	826				999
	IN	16	35.50	39.00				3708
	MM	400	902	991				1682
	IN	18	/	/				/
	MM	450	/	/				/
	IN	20	47.00	/				9627
	MM	500	1194	/				4367

Rising Stem Ball Valves
Size: 2” - 20” Class: 600

DRAWING NEEDED

CLASS 600

SIZE		END-TO-END		?	?	?	WEIGHTS LBS/KG
		A - RF	A - BW				FLANGED
IN	2	11.50	8.50				78
MM	50	292	216				35
IN	3	14.00	11.63				155
MM	80	356	295				70
IN	4	17.00	14.50				273
MM	100	432	368				124
IN	6	22.00	18.62				599
MM	150	559	473				272
IN	8	22.00	26.00				1031
MM	200	559	660				468
IN	10	26.00	31.00				1772
MM	250	660	787				804
IN	12	31.00	33.00				2831
MM	300	787	838				1284
IN	14	35.00	35.00				3508
MM	350	889	889				1591
IN	16	39.00	39.00				4032
MM	400	991	991				1829
IN	18	/	/				/
MM	450	/	/				/
IN	20	47.00	/				10305
MM	500	1194	/				4674

Rising Stem Ball Valves
Size: 2” - 16” Class: 900

DRAWING NEEDED

CLASS 900	SIZE		END-TO-END		?	?	?	WEIGHTS LBS/KG
			A - RF	A - BW				FLANGED
	IN	2	14.63	10.63				138
	MM	50	371	270				63
	IN	3	15.13	13.25				181
	MM	80	384	337				82
	IN	4	18.12	14.50				305
	MM	100	460	368				138
	IN	6	24.12	23.00				877
	MM	150	613	584				398
	IN	8	29.13	29.00				1412
	MM	200	740	373				640
	IN	10	33.13	33.00				2100
	MM	250	841	838				953
	IN	12	38.13	38.00				3393
	MM	300	968	965				1539
	IN	14	/	/				/
	MM	350	/	/				/
	IN	16	44.88	/				6847
	MM	400	1140	/				3106

Rising Stem Ball Valves
Size: 2” - 12” Class: 1500

DRAWING NEEDED

CLASS 1500	SIZE		END-TO-END		?	?	?	WEIGHTS LBS/KG
			A - RF	A - BW				FLANGED
	IN	2	14.63	10.63				144
	MM	50	371	270				65
	IN	3	18.63	13.25				269
	MM	80	473	337				122
	IN	4	21.63	21.50				410
	MM	100	459	546				186
	IN	6	28.00	27.75				1705
	MM	150	711	705				773
	IN	8	33.13	/				2810
	MM	200	841	/				1275
	IN	10	39.38	/				4495
	MM	250	1000	/				2039
	IN	12	45.13	/				6422
	MM	300	1146	/				2913

Rising Stem Ball Valves
Size: 2” - 8” Class: 2500

DRAWING NEEDED

CLASS 2500	SIZE		END-TO-END A - RTJ	?	?	?	WEIGHTS LBS/KG FLANGED
	IN	2	17.88				225
	MM	50	454				102
	IN	3	23.00				408
	MM	80	584				185
	IN	4	26.88				802
	MM	100	683				364
	IN	6	36.50				2001
	MM	150	927				908
	IN	8	40.88				3720
	MM	200	1036				1687

Bolted Bonnet Globe Valves
Size: 2” - 18” Class: 150 - 2500

Flow Coefficients Cv Values

The Flow Coefficiency (Cv) of a valve is the rate of gallons per minute of water at 60° F through a fully opened valve at a pressure drop of 1 PSI across the valve.

Size	150	300	600	900	1500	2500
2	42	42	42	45	/	/
2.5	67	67	67	/	/	/
3	100	100	100	90	95	65
4	185	185	185	170	170	1005
6	440	440	440	400	395	265
8	810	810	780	710	695	470
10	1260	1260	1200	1100	1085	750
12	1890	1890	1810	/	/	1100
14	2441	2141	1960	/	/	1328
16	3234	3234	/	/	/	1737
18	4308	4183	/	/	/	2279

Pressure Temperature Ratings - ASME B16.34

Note: Pressures in PSI

	Temp. F	A105	WCB	LF2	WCC	LCB	WC6	LCC	C5	C12	C12A	316	CF8M	F51	F53
150	-20 to 100	285	285	285	290	265	290	290	290	290	290	275	275	290	290
	200	260	260	260	260	255	260	260	260	260	260	235	235	260	260
	300	230	230	230	230	230	230	230	230	230	230	215	215	230	230
	400	200	200	200	200	200	200	200	200	200	200	195	195	200	200
	500	170	170	170	170	170	170	170	170	170	170	170	170	170	170
	600	140	140	140	140	140	140	140	140	140	140	140	140	140	140
	650	125	125	125	125	125	125	125	125	125	125	125	125	125	125
	700	110	110	110	110	110	110	110	110	110	110	110	110	110	110
	750	95	95	95	95	95	95	95	95	95	95	95	95	95	95
	800	80	80	80	80	80	80	80	80	80	80	80	80	/	/
	850	65	65	65	65	65	65	65	65	65	65	65	65	/	/
	900	50	50	50	50	50	50	50	50	50	50	50	50	/	/
	950	35	35	35	35	35	35	35	35	35	35	35	35	/	/
	1000	20	20	20	20	20	20	20	20	20	20	20	20	/	/
	1050	/	/	/	/	/	20	/	20	20	20	20	20	/	/
	1100	/	/	/	/	/	20	/	20	20	20	20	20	/	/
	1150	/	/	/	/	/	20	/	20	20	20	20	20	/	/
	1200	/	/	/	/	/	15	/	15	20	20	20	20	/	/
	1250	/	/	/	/	/	/	/	/	/	/	20	20	/	/
	1300	/	/	/	/	/	/	/	/	/	/	20	20	/	/
	1350	/	/	/	/	/	/	/	/	/	/	20	20	/	/
	1400	/	/	/	/	/	/	/	/	/	/	20	20	/	/
	1450	/	/	/	/	/	/	/	/	/	/	20	20	/	/
	1500	/	/	/	/	/	/	/	/	/	/	15	15	/	/
	Temp. F	A105	WCB	LF2	WCC	LCB	WC6	LCC	C5	C12	C12A	316	CF8M	F51	F53
300	-20 to 100	740	740	740	750	695	750	750	750	750	750	720	720	750	750
	200	680	680	680	750	660	750	750	750	750	750	620	620	745	745
	300	655	655	655	730	640	720	730	730	730	730	560	560	665	665
	400	635	635	635	705	615	695	705	705	705	705	515	515	615	615
	500	605	605	605	665	585	665	665	665	665	665	480	480	580	580
	600	570	570	570	605	550	605	605	605	605	605	450	450	555	555
	650	550	550	550	590	535	590	590	590	590	590	440	440	545	545
	700	530	530	530	555	510	570	555	570	570	570	435	435	540	540
	750	505	505	505	505	475	530	505	530	530	530	425	425	530	530
	800	410	410	410	410	390	510	410	510	510	510	420	420	/	/
	850	320	320	320	320	300	485	320	485	485	485	420	420	/	/
	900	230	230	230	225	200	450	225	375	450	450	415	415	/	/
	950	135	135	135	135	135	320	135	275	375	385	385	385	/	/
	1000	85	85	85	85	85	215	85	200	255	365	365	365	/	/
	1050	/	/	/	/	/	145	/	145	170	360	160	160	/	/
	1100	/	/	/	/	/	95	/	100	115	300	305	305	/	/
	1150	/	/	/	/	/	65	/	60	75	225	235	235	/	/
	1200	/	/	/	/	/	40	/	35	50	145	185	185	/	/
	1250	/	/	/	/	/	/	/	/	/	/	145	145	/	/
	1300	/	/	/	/	/	/	/	/	/	/	115	115	/	/
	1350	/	/	/	/	/	/	/	/	/	/	95	95	/	/
	1400	/	/	/	/	/	/	/	/	/	/	75	75	/	/
	1450	/	/	/	/	/	/	/	/	/	/	60	60	/	/
	1500	/	/	/	/	/	/	/	/	/	/	40	40	/	/

Pressure Temperature Ratings - ASME B16.34

Note: Pressures in PSI

	Temp. F	A105	WCB	LF2	WCC	LCB	WC6	LCC	C5	C12	C12A	316	CF8M	F51	F53
600	-20 to 100	1480	1480	1480	1500	1395	1500	1500	1500	1500	1500	1440	1440	1500	1500
	200	1360	1360	1360	1500	1320	1500	1500	1500	1500	1500	1240	1240	1490	1490
	300	1310	1310	1310	1455	1275	1445	1455	1455	1455	1455	1120	1120	1335	1335
	400	1265	1265	1265	1405	1230	1385	1405	1410	1410	1410	1025	1025	1230	1230
	500	1205	1205	1205	1330	1175	1330	1330	1330	1330	1330	995	995	1160	1160
	600	1135	1135	1135	1210	1105	1210	1210	1210	1210	1210	900	900	1115	1115
	650	1100	1100	1100	1175	1065	1175	1175	1175	1175	1175	885	885	1095	1095
	700	1060	1060	1060	1110	1025	1135	1110	1135	1135	1135	870	870	1085	1085
	750	1015	1015	1015	1015	955	1065	1015	1065	1065	1065	855	855	1065	1065
	800	825	825	825	825	780	1015	825	1015	1015	1015	845	845	/	/
	850	640	640	640	640	595	975	640	975	975	975	835	835	/	/
	900	460	460	460	445	405	900	445	745	900	900	830	830	/	/
	950	275	275	275	275	275	640	275	550	755	775	775	775	/	/
	1000	170	170	170	170	170	430	170	400	505	725	725	725	/	/
	1050	/	/	/	/	/	290	/	290	345	720	720	720	/	/
	1100	/	/	/	/	/	190	/	200	225	605	610	610	/	/
	1150	/	/	/	/	/	130	/	125	150	445	475	475	/	/
	1200	/	/	/	/	/	80	/	70	105	290	370	370	/	/
	1250	/	/	/	/	/	/	/	/	/	/	295	295	/	/
	1300	/	/	/	/	/	/	/	/	/	/	235	235	/	/
	1350	/	/	/	/	/	/	/	/	/	/	190	190	/	/
	1400	/	/	/	/	/	/	/	/	/	/	150	150	/	/
	1450	/	/	/	/	/	/	/	/	/	/	115	115	/	/
	1500	/	/	/	/	/	/	/	/	/	/	85	85	/	/
	Temp. F	A105	WCB	LF2	WCC	LCB	WC6	LCC	C5	C12	C12A	316	CF8M	F51	F53
900	-20 to 100	2220	2220	2220	2250	2090	2250	2250	2250	2250	2250	2160	2160	2250	2250
	200	2035	2035	2035	2250	1980	2250	2250	2250	2250	2250	1860	1860	2230	2230
	300	1965	1965	1965	2185	1915	2165	2185	2185	2185	2185	1680	1680	2000	2000
	400	1900	1900	1900	2110	1845	2080	2110	2115	2115	2115	1540	1540	1845	1845
	500	1810	1810	1810	1995	1760	1995	1995	1995	1995	1995	1435	1435	1740	1740
	600	1705	1705	1705	1815	1655	1815	1815	1815	1815	1815	1355	1355	1670	1670
	650	1650	1650	1650	1765	1600	1765	1765	1765	1765	1765	1325	1325	1640	1640
	700	1590	1590	1590	1665	1535	1705	1665	1705	1705	1705	1305	1305	1625	1625
	750	1520	1520	1520	1520	1430	1595	1520	1595	1595	1595	1280	1280	1595	1595
	800	1235	1235	1235	1235	1175	1525	1235	1525	1525	1525	1265	1265	/	/
	850	955	955	955	955	895	1460	955	1460	1460	1460	1255	1255	/	/
	900	690	690	690	670	605	1350	670	1120	1350	1350	1245	1245	/	/
	950	410	410	410	410	410	955	410	825	1130	1160	1160	1160	/	/
	1000	255	255	255	255	255	650	255	595	760	1090	1090	1090	/	/
	1050	/	/	/	/	/	430	/	430	515	1080	1080	1080	/	/
	1100	/	/	/	/	/	290	/	300	340	905	915	915	/	/
	1150	/	/	/	/	/	195	/	185	225	670	710	710	/	/
	1200	/	/	/	/	/	125	/	105	155	430	555	555	/	/
	1250	/	/	/	/	/	/	/	/	/	/	440	440	/	/
	1300	/	/	/	/	/	/	/	/	/	/	350	350	/	/
	1350	/	/	/	/	/	/	/	/	/	/	290	290	/	/
	1400	/	/	/	/	/	/	/	/	/	/	225	225	/	/
	1450	/	/	/	/	/	/	/	/	/	/	175	175	/	/
	1500	/	/	/	/	/	/	/	/	/	/	125	125	/	/

Pressure Temperature Ratings - ASME B16.34

Note: Pressures in PSI

	Temp. F	A105	WCB	LF2	WCC	LCB	WC6	LCC	C5	C12	C12A	316	CF8M	F51	F53
1500	-20 to 100	3705	3705	3705	3750	3480	3750	3750	3750	3750	3750	3600	3600	3750	3750
	200	3395	3395	3395	3750	3300	3750	3750	3750	3750	3750	3095	3095	3720	3720
	300	3270	3270	3270	3640	3190	3610	3640	3640	3640	3640	2795	2795	3335	3335
	400	3170	3170	3170	3520	3075	3465	3520	3530	3530	3530	2570	2570	3070	3070
	500	3015	3015	3015	3325	2930	3325	3325	3325	3325	3325	2390	2390	2905	2905
	600	2840	2840	2840	3025	2755	3025	3025	3025	3025	3025	2255	2255	2785	2785
	650	2745	2745	2745	2940	2665	2940	2940	2940	2940	2940	2210	2210	2735	2735
	700	2665	2665	2665	2775	2560	2840	2775	2840	2840	2840	2170	2170	2710	2710
	750	2535	2535	2535	2535	2385	2660	2535	2660	2660	2660	2135	2135	2660	2660
	800	2055	2055	2055	2055	1955	2540	2055	2540	2540	2540	2110	2110	/	/
	850	1595	1595	1595	1595	1490	2435	1595	2435	2435	2435	2090	2090	/	/
	900	1150	1150	1150	1115	1010	2245	1115	1870	2245	2245	2075	2075	/	/
	950	685	685	685	685	685	1591	685	1370	1885	1930	1930	1930	/	/
	1000	430	430	430	430	430	1080	430	995	1270	1820	1820	1820	/	/
	1050	/	/	/	/	/	720	/	720	855	1800	1800	1800	/	/
	1100	/	/	/	/	/	480	/	495	565	1510	1525	1525	/	/
	1150	/	/	/	/	/	325	/	310	375	1115	1185	1185	/	/
	1200	/	/	/	/	/	205	/	170	255	720	925	925	/	/
	1250	/	/	/	/	/	/	/	/	/	/	735	735	/	/
	1300	/	/	/	/	/	/	/	/	/	/	585	585	/	/
	1350	/	/	/	/	/	/	/	/	/	/	480	480	/	/
	1400	/	/	/	/	/	/	/	/	/	/	380	380	/	/
	1450	/	/	/	/	/	/	/	/	/	/	290	290	/	/
	1500	/	/	/	/	/	/	/	/	/	/	205	205	/	/
2500	Temp. F	A105	WCB	LF2	WCC	LCB	WC6	LCC	C5	C12	C12A	316	CF8M	F51	F53
	-20 to 100	6170	6170	6170	6250	5805	6250	6250	6250	3250	6250	6000	6000	6250	6250
	200	5655	5655	5655	6250	5505	6250	6250	6250	6250	6250	5160	5160	6200	6200
	300	5450	5450	5450	6070	5315	6015	6070	6070	6070	6070	4660	4660	5560	5560
	400	5280	5280	5280	5865	5125	5775	5865	5880	5880	5880	4280	4280	5120	5120
	500	5025	5025	5025	5540	4885	5540	5540	5540	5540	5540	3980	3980	4840	4840
	600	4730	4730	4730	5040	4595	5040	5040	5040	5040	5040	3760	3760	4640	4640
	650	4575	4575	4575	4905	4440	4905	4905	4905	4905	4905	3680	3680	4560	4560
	700	4425	4425	4425	4630	4270	4730	4630	4730	4730	4730	3620	3620	4520	4520
	750	4230	4230	4230	4230	3970	4430	4230	4430	4430	4430	3560	3560	4430	4430
	800	3430	3430	3430	3430	3255	4230	3430	4230	4230	4230	3520	3520	/	/
	850	2655	2655	2655	2655	2485	4060	2655	4060	4060	4060	3480	3480	/	/
	900	1915	1915	1915	1855	1685	3745	1855	3115	3745	3745	3460	3460	/	/
	950	1145	1145	1145	1145	1145	3655	1145	2285	3145	3220	3220	3220	/	/
	1000	715	715	715	715	715	1800	715	1655	2115	3030	3030	3030	/	/
	1050	/	/	/	/	/	1200	/	1200	1430	3000	3000	3000	/	/
	1100	/	/	/	/	/	800	/	830	945	2515	2545	2545	/	/
	1150	/	/	/	/	/	545	/	515	630	1855	1970	1970	/	/
	1200	/	/	/	/	/	345	/	285	770	1200	1545	1545	/	/
	1250	/	/	/	/	/	/	/	/	/	/	1230	1230	/	/
	1300	/	/	/	/	/	/	/	/	/	/	970	970	/	/
	1350	/	/	/	/	/	/	/	/	/	/	800	800	/	/
	1400	/	/	/	/	/	/	/	/	/	/	630	630	/	/
	1450	/	/	/	/	/	/	/	/	/	/	485	485	/	/
	1500	/	/	/	/	/	/	/	/	/	/	345	345	/	/

Flange Dimensions - ANSI B16.5 & B16.47

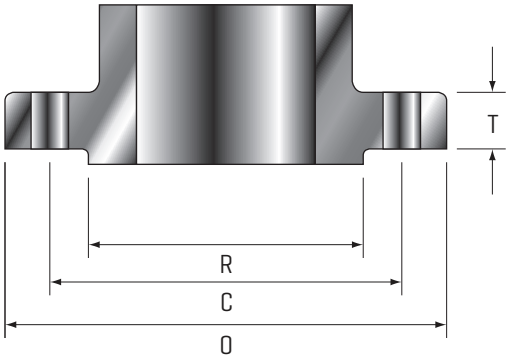

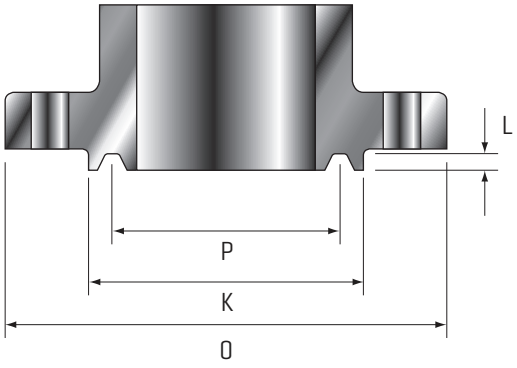

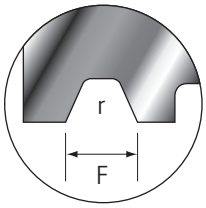

Groove Detail

Class	Size	Flg. Dia.	Flg. Thick.	Raised Face Dia.	Drilling			Face Dia.	Ring Joint				
					Bolt CIrcle Dia.	# of Bolts	Hole Dia.		Pitch Dia.	Grv. Depth	Grv. Width	Btm. Radius	Ring No.
		O	T	R	C			K	P	L	F	r	
150	2	6.00	0.75	3.62	4.75	4	0.75	4.00	3.250	0.250	0.344	0.03	R22
	2.5	7.00	0.88	4.12	5.50	4	0.75	4.75	4.000	0.250	0.344	0.03	R25
	3	7.50	0.94	5.00	6.00	4	0.75	5.25	4.500	0.250	0.344	0.03	R29
	4	9.00	0.94	6.19	7.50	8	0.75	6.75	5.875	0.250	0.344	0.03	R36
	6	11.00	1.00	8.50	9.50	8	0.88	8.62	7.625	0.250	0.344	0.03	R43
	8	13.50	1.12	10.62	11.75	8	0.88	10.75	9.750	0.250	0.344	0.03	R48
	10	16.00	1.19	12.75	14.25	12	1.00	13.00	12.000	0.250	0.344	0.03	R52
	12	19.00	1.25	15.00	17.00	12	1.00	16.00	15.000	0.250	0.344	0.03	R56
	14	21.00	1.38	16.25	18.75	12	1.12	16.75	15.625	0.250	0.344	0.03	R59
	16	23.50	1.44	18.50	21.25	16	1.12	19.00	17.875	0.250	0.344	0.03	R64
	18	25.00	1.56	21.00	22.75	16	1.25	21.50	20.375	0.250	0.344	0.03	R68
	20	27.50	1.69	23.00	25.00	20	1.25	23.50	22.000	0.250	0.344	0.03	R72
	22	29.50	1.81	25.25	27.25	20	1.38	/	/	/	/	/	/
	24	32.00	1.88	27.25	29.50	20	1.38	28.00	26.500	0.250	0.344	0.03	R76
	26	34.25	2.69	29.50	31.75	24	1.38	/	29.500	0.500	0.781	0.060	R93
	28	36.50	2.81	31.50	34.00	28	1.38	/	31.500	0.500	0.781	0.060	R94
	30	38.75	2.94	33.75	36.00	28	1.38	/	33.750	0.500	0.781	0.060	R95
	32	41.75	3.19	36.00	38.50	28	1.62	/	36.000	0.562	0.906	0.060	R96
	34	43.75	3.25	38.00	40.50	32	1.62	/	38.000	0.562	0.906	0.060	R97
	36	46.00	3.56	40.25	42.75	32	1.62	/	40.250	0.562	0.906	0.060	R98
300	2	6.50	0.88	3.62	5.00	8	0.75	4.25	3.250	0.312	0.469	0.03	R23
	2.5	7.50	1.00	4.12	5.88	8	0.88	5.00	4.000	0.312	0.469	0.03	R26
	3	8.25	1.12	5.00	6.62	8	0.88	5.75	4.875	0.312	0.469	0.03	R31
	4	10.00	1.25	6.19	7.88	8	0.88	6.88	5.875	0.312	0.469	0.03	R37
	6	12.50	1.44	8.50	10.62	12	0.88	9.50	8.312	0.312	0.469	0.03	R45
	8	15.00	1.62	10.62	13.00	12	1.00	11.88	10.625	0.312	0.469	0.03	R49
	10	17.50	1.88	12.75	15.25	16	1.12	14.00	12.750	0.312	0.469	0.03	R53
	12	20.50	2.00	15.00	17.75	16	1.25	16.25	15.000	0.312	0.469	0.03	R57
	14	23.00	2.12	16.25	20.25	20	1.25	18.00	16.500	0.312	0.469	0.03	R61
	16	25.50	2.25	18.50	22.50	20	1.38	20.00	18.500	0.312	0.469	0.03	R65
	18	28.00	2.38	21.00	24.75	24	1.38	22.62	21.000	0.312	0.469	0.03	R69
	20	30.50	2.50	23.00	27.00	24	1.38	25.00	23.000	0.375	0.531	0.06	R73
	22	33.00	2.62	25.25	29.25	24	1.62	27.00	25.000	0.438	0.594	0.06	R81
	24	36.00	2.75	27.25	32.00	24	1.62	29.50	27.250	0.438	0.656	0.06	R77
	26	38.25	3.31	29.50	34.50	28	1.75	31.88	29.500	0.500	0.781	0.06	R93
	28	40.75	3.56	31.50	37.00	28	1.75	33.88	31.500	0.500	0.781	0.06	R94
	30	43.00	3.75	33.75	39.25	28	1.88	36.12	33.750	0.500	0.781	0.06	R95
	32	45.25	3.94	36.00	41.50	28	2.00	38.75	36.000	0.562	0.906	0.06	R96
	34	47.50	4.12	38.00	43.50	28	2.00	40.75	38.000	0.562	0.906	0.06	R97
	36	50.00	4.38	40.25	46.00	32	2.12	43.00	40.250	0.562	0.906	0.06	R98

Flange Dimensions - ANSI B16.5 & B16.47

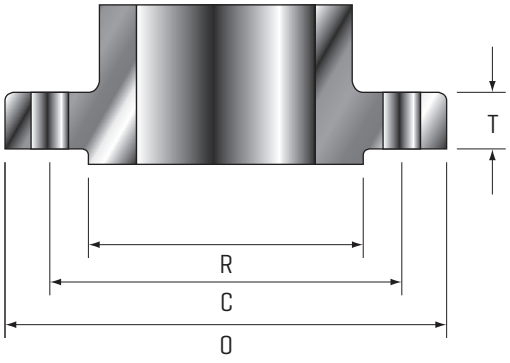

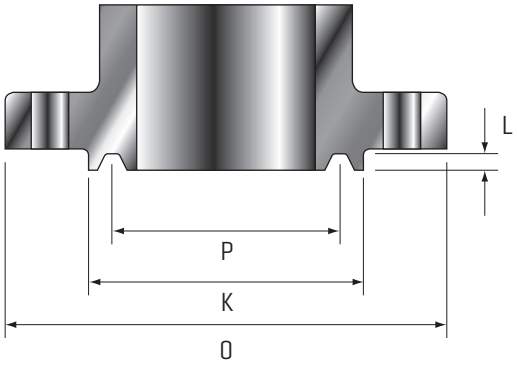

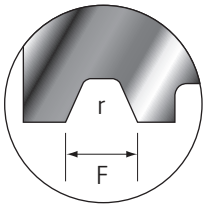

Groove Detail

Class	Size	Flg. Dia.	Flg. Thick.	Raised Face Dia.	Drilling			Face Dia.	Ring Joint				
					Bolt CIrcle Dia.	# of Bolts	Hole Dia.		Pitch Dia.	Grv. Depth	Grv. Width	Btm. Radius	Ring No.
		O	T	R	C			K	P	L	F	r	
600	2	6.50	1.00	3.62	5.00	8	0.75	4.25	3.250	0.312	0.469	0.03	R23
	2.5	7.50	1.12	4.12	5.88	8	0.88	5.00	4.000	0.312	0.469	0.03	R26
	3	8.25	1.25	5.00	6.62	8	0.88	5.75	4.875	0.312	0.469	0.03	R31
	4	10.75	1.50	6.19	8.50	8	1.00	6.88	5.875	0.312	0.469	0.03	R37
	6	14.00	1.88	8.50	11.50	12	1.12	9.50	8.312	0.312	0.469	0.03	R45
	8	16.50	2.19	10.62	13.75	12	1.25	11.88	10.625	0.312	0.469	0.03	R49
	10	20.00	2.50	12.75	17.00	16	1.38	14.00	12.750	0.312	0.469	0.03	R53
	12	22.00	2.62	15.00	19.25	20	1.38	16.25	15.000	0.312	0.469	0.03	R57
	14	23.75	2.75	16.25	20.75	20	1.5	18.00	16.500	0.312	0.469	0.03	R61
	16	27.00	3.00	18.50	23.75	20	1.62	20.00	18.500	0.312	0.469	0.03	R65
	18	29.25	3.25	21.00	25.75	20	1.75	22.62	21.000	0.312	0.469	0.03	R69
	20	32.00	3.50	23.00	28.50	24	1.75	25.00	23.000	0.375	0.531	0.06	R73
	22	34.25	3.75	25.25	30.62	24	1.88	27.00	25.000	0.438	0.594	0.06	R81
	24	37.00	4.00	27.25	33.00	24	2.00	29.50	27.250	0.438	0.659	0.06	R77
900	2	8.5	1.5	3.62	6.5	8	1	4.88	3.75	0.312	0.469	0.03	R24
	2.5	9.62	1.62	4.12	7.50	8	1.12	5.39	4.250	0.312	0.469	0.03	R27
	3	9.50	1.50	5.00	7.50	8	1.00	6.12	4.875	0.312	0.469	0.03	R31
	4	11.50	1.75	6.19	9.25	8	1.25	7.12	5.875	0.312	0.469	0.03	R37
	6	15.50	2.19	8.50	12.50	12	1.25	9.50	8.312	0.312	0.469	0.03	R45
	8	18.50	2.50	10.62	15.50	12	1.50	12.12	10.625	0.312	0.469	0.03	R49
	10	21.50	2.75	12.75	18.50	16	1.50	14.25	12.750	0.312	0.469	0.03	R53
	12	24.00	3.12	15.00	21.00	20	1.50	16.50	15.000	0.312	0.469	0.03	R57
	14	25.25	3.38	16.25	22.00	20	1.62	18.38	16.500	0.438	0.656	0.06	R62
	16	27.75	3.50	18.50	24.25	20	1.75	20.62	18.500	0.438	0.656	0.06	R66
	18	31.00	4.00	21.00	27.00	20	2.00	23.38	21.00	0.500	0.781	0.06	R70
	20	33.75	4.25	23.00	29.50	20	2.12	25.50	23.000	0.500	0.781	0.06	R74
	24	41.00	5.50	27.25	35.50	20	2.62	30.38	27.250	0.625	1.062	0.09	R78
1500	2	8.50	1.50	3.62	6.50	8	1.00	4.88	3.750	0.312	0.469	0.03	R24
	2.5	9.62	1.62	4.12	7.50	8	1.12	5.38	4.250	0.312	0.469	0.03	R27
	3	10.50	1.88	5.00	8.00	8	1.25	6.62	5.375	0.312	0.469	0.03	R35
	4	12.25	2.12	6.19	9.50	8	1.38	7.62	6.375	0.312	0.469	0.03	R39
	6	15.50	3.25	8.50	12.50	12	1.50	9.75	8.312	0.375	0.531	0.06	R46
	8	19.00	3.62	10.62	15.50	12	1.75	12.50	10.625	0.438	0.656	0.06	R50
	10	23.00	4.25	12.75	19.00	12	2.00	14.62	12.750	0.438	0.656	0.06	R54
	12	26.00	4.88	15.00	22.50	16	2.12	17.25	15.000	0.562	0.906	0.06	R58
	14	29.50	5.25	16.25	25.00	16	2.38	19.25	16.500	0.625	1.062	0.09	R63
	16	32.50	5.75	18.50	27.75	16	2.62	21.50	18.500	0.688	1.188	0.09	R67
	18	36.00	6.38	21.00	30.50	16	2.88	24.12	21.000	0.688	1.188	0.09	R71
	20	38.75	7.00	23.00	32.75	16	3.12	26.50	23.000	0.688	1.312	0.09	R75
	24	46.00	8.00	27.25	39.00	16	3.62	31.25	27.250	0.812	1.438	0.09	R79
2500	2	9.25	2.00	3.62	6.75	8	1.00	4.48	4.000	0.312	0.469	0.030	R26
	2.5	10.50	2.25	4.12	7.75	8	1.13	5.86	4.375	0.375	0.531	0.060	R28
	3	12.00	2.62	5.00	9.00	8	1.25	6.61	5.000	0.375	0.531	0.060	R32
	4	14.00	3.00	6.19	10.75	8	1.50	7.99	6.188	0.438	0.656	0.060	R38
	5	16.50	3.62	7.31	12.75	8	1.75	9.48	7.500	0.500	0.781	0.060	R40
	6	19.00	4.25	8.50	14.50	8	2.00	10.98	9.000	0.500	0.781	0.060	R47
	8	21.75	5.00	10.62	17.25	12	2.00	13.38	11.000	0.562	0.906	0.060	R51
	10	26.50	6.50	12.75	21.75	12	2.50	16.73	13.500	0.688	1.188	0.090	R55
	12	30.00	7.25	15.00	24.38	12	2.75	19.48	16.000	0.688	1.312	0.090	R60

All New SCV 6D RSBV

From pipelines to processing, **SCV Valve** has the 6D products to complete your projects.

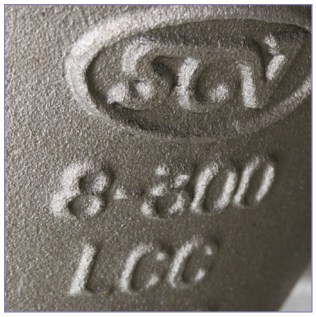


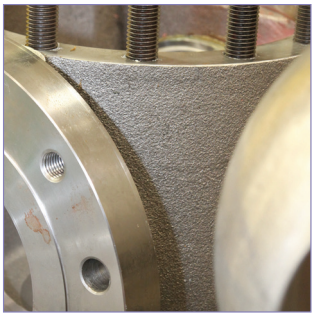


SCV VALVE manufactures one of the most advanced Rising Stem Ball Valves in the industry. The stem employs an offset ball and mechanical cam that creates the very reliable "Shift, Rotate, & Index" ball movement. This technology precisely moves the ball into the seat resulting in a uniformed seal that exceeds industry standards while minimizing seat wear and friction, which is the main cause of seal failure.

SCV's Rising Stem Ball Valves offer low torque requirements, quick & easy interchangeable seats, extended performance, and bubble-tight shutoff in flanged and butt-weld designs.

Standard Features

- Zero-friction Opening and Closing
- Low-torque Requirements
- Stem Track & Pin Guided
- Single-seat Design
- Adjustable Packing
- Top-entry Design
- Quick & Easy Interchangeable Seat
- Full Port Performance
- In-line Serviceable

Specifications

- Basic Design: API 6D
- Inspection & Testing: API 6D
- Face-to-Face: API 6D
- Shell Wall Thickness: API 6D
- Fire Safe Design: API 6FA/BS 6755
- Flange Dimensions: ANSI/ASME B16.5
- Butt-Weld End Dimensions: ANSI/ASME B16.25

Service Applications

- Produced Water
- Sand Slurry
- Hot Oil
- Steam
- Hydrocarbons Wet Gas
- Fiscal Gas Metering
- Emergency Blow Down
- Emergency Shutdown
- High Temperature
- Dehydration of Gas & Regeneration
- Lethal H2S
- Molecular Sieve Frequent Switching
- Low Temperature (-248° F)
- High Temperature (+1200° F)

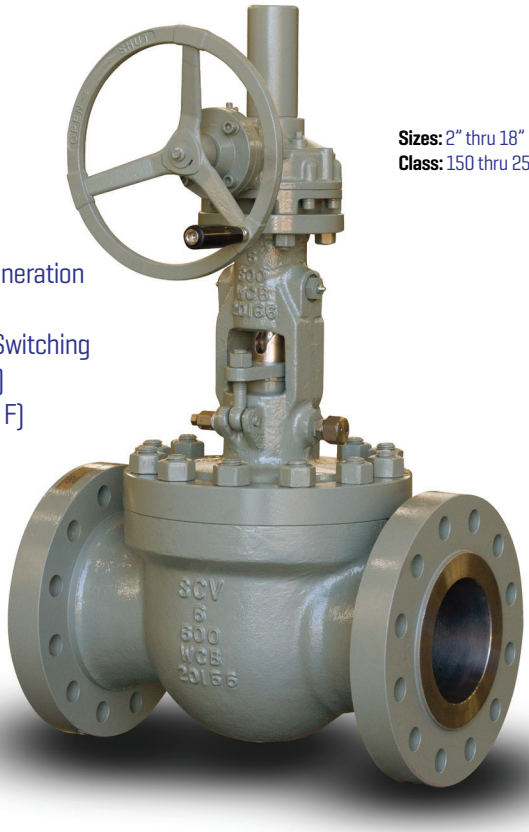

Sizes: 2" thru 18"
Class: 150 thru 2500

SCV VALVE
Innovative Valve Solutions®

www.scvvalve.com · (281) 482.4728

Industry Standards for Valve Manufacturing

This information is for reference only.

American Society of Mechanical Engineers (ASME)

ASME Code - Boiler & pressure vessel code
ASME A13.1 - Scheme for the identification of piping systems
ASME B1.1 - Unified inch screw threads, UN, & UNR thread form
ASME B1.5 - ACME screw threads
ASME B1.7M - Nomenclature, definitions, & letter symbols for screw threads
ASME B1.8 - Stub ACME screw threads
ASME B1.12 - Class 5 interference - fit thread
ASME B1.20.1 - Pipe threads, general purpose, inch
ASME B1.20.3 - Dry-seal pipe threads, inch
ANSI/ASME B16.1 - Cast iron pipe flanges & flanged fittings
ANSI/ASME B16.5 - Pipe flanges & flanged fittings: NPS 1/2" - 24"
ASME B16.9 - Factory made wrought steel buttwelding fittings
ANSI/ASME B16.10 - Face-to-face & end-to-end dimensions of valves
ASME B16.11 - Forged fittings, socket welding & threaded
ASME B16.20 - Metallic gaskets for pipe flanges: ring joint spiral wound & jacketed
ASME B16.21 - Non-metallic flat gaskets for pipe flanges
ASME B16.25 - Buttwelding ends
ANSI/ASME B16.33 - Manually operated metallic gas valves for use in gas piping systems up to 125 PSI (sizes NPS 1/2" - 2")
ANSI/ASME B31.1 - Power piping
ANSI/ASME B31.3 - Process piping
ANSI/ASME B16.34 - Valves flanged, threaded & welding end
ANSI/ASME B16.36 - Orifice flanges
ANSI/ASME B16.38 - Large metallic valves for gas distribution (manually operated, NPS 2-1/2" - 12", 125 PSIG maximum)
ANSI/ASME B16.42 - Ductile iron pipe flanges & flanged fittings: classes 150 & 300
ANSI/ASME B16.47 - Large diameter steel flanges
ANSI B17.1 - Keys & keyseats
ANSI B18.2.2 - Square & hex nuts
ASME B31.4 - Pipeline transportation systems for liquid hydrocarbons & other ammonia & alcohols
ANSI/ASME B31.8 - Gas transmission & distribution piping systems
ANSI/ASME B36.10 - Welded & seamless wrought steel pipe
ANSI/ASME B36.19 - Stainless steel pipe
ANSI FCI-2 - Control valve seat leakage

American Society Non-destructive Test (ASNT)

ASNT-TC-1A - Recommended practice no. SNT-TC-1A 1996

American Society for Testing and Materials (ASTM)

American Petroleum Institute (API)

API RP 574 - Inspection practices for piping system components
API 589 - Fire test for evaluation of valve stem packing
API RP 591 - Process valve qualification procedure
API 594 - Check valves-flanged, lug, wafer & buttwelding
API 597 - Steel venturi gate valves, flanged, buttwelding ends
API 598 - Valve inspection & testing
API 599 - Metal plug valves - flanged, welding ends
API 601 - Metallic gaskets for raised-face pipe flanges & flanged connections (double-jacketed corrugated & spiral wound)
API 600 - Bolted bonnet steel gate valves for petroleum & natural as industries "ISO adoption from ISO 10434"
API 602 - Steel gate, globe, & check valves for sizes DN100 and smaller for the petroleum & natural gas industries
API 603 - Corrosion-resistant, bolted bonnet gate valves-flanged & buttweld ends
API 604 - Ductile iron gate valves, flanged ends
API 605 - Large-diameter carbon steel flanges (nominal pipe sizes 26" - 60", classes 75, 150, 300, 400, 600, & 900 (replaced by ANSI/ASME B16.47)
API 606 - Compact steel gate valves, extended body (included in API 602) fire test for soft-seated quarter-turn valves "ISO adoption from ISO 10497-5 2004"
API 607 - Fire test for soft-seated quarter-turn valves "ISO adoption from ISO 10497-5 2004"
API 608 - Metal ball valves, flanged, threaded, & welding ends
API 609 - Butterfly valves-double flanged, lug- & wafer-type
API RP 941 - Steel for hydrogen service at elevated temperatures & pressures in petroleum refineries & petrochemical plants
API RP 520, Part 1 - Sizing, selection & installation of pressure relieving devices in refineries
API RP 520, Part 2 - Sizing, selection & installation of pressure relieving devices in refineries devices in refineries
API Spec 6A - Specification for wellhead & christmas tree equipment
API Spec 6D - Specifications for pipeline valves
API Spec 14D - Specifications for wellhead surface safety valves & underwater safety valves for offshore service
API 5B - Threading, gauging thread inspection of coring, tubing, & line pipe threads
API 6AM - Material toughness
API 6FA - Fire test for valves
API 6FC - Fire test for valves with backseats
API 6FD - Specification for fire test for check valves
API Q1 - Specification for quality programs for the petroleum, petrochemical, & natural gas

National Association of Corrosion Engineers (NACE)

MR0175 - Sulfide stress cracking resistant metallic materials for oil field equipment
MR0103 - Materials resistant to sulfide street cracking in corrosive petroleum refining environments

Canadian Standards Association

B51-97 - Boiler, pressure vessel, & pressure piping code
Z245.15-96 - Steel valves
CAN3-z299.4-85 - Quality assurance program - Category 4
CAN3-z299.3-85 - Quality assurance program - Category 3

British Standards Institute (BS)

BS 1414 - Gate, wedge & double disk valves: steel
BS 1868 - Check valves: steel
BS 1873 - Globe & check valves: steel
BS 2080 - Flanged & buttweld end steel valves
BS 5146 - (withdrawn) Replaced by BS 6755 p.1 steel valves testing (1986) & BS 6755 p.2 (1984)
BS 5152 - Globe & check: cast iron
BS 5153 - Check: cast iron
BS 5159 - Ball: cast iron & carbon steel
BS 5160 - Globe & check: steel
BS 5163 - Gate, wedge & double disk: cast iron
BS 5351 - Ball: steel
BS 5352 - Globe & check: steel
BS 5418 - (withdrawn) Replaced by BS EN 19 (1992) marking: general purpose industrial
BS 5840 - Valve mating details for actuator operation
BS 6364 - Cryogenic
BS 6683 - Guide: installation & use of valves
BS 6755: Part 1 - Specification for production pressure testing requirements
BS 6755: Part 2 - Specification for fire type-testing requirements
BS EN 19 - Marking of general purpose industrial valves

International Organization for Standardization

ISO 5211/1 - Industrial valves- part-turn actuator attachments
ISO 5211/2 - Part-turn valve actuator attachment-flange & coupling performance characteristics
ISO 5211/3 - Part-turn valve actuator attachment-dimensions of driving components
ISO 5752 - Metal valves for use in flanged pipe systems face-to-face & center-to-face dimensions
ISO 9000 - Quality management systems and fundamentals & vocabulary
ISO 10012-1 - Quality assurance requirements for measuring equipment

Manufacturers Standardization Society

SP-6 - Standard finishes for contact faces of pipe flanges & connecting-end flanges of valves & fittings
SP-9 - Spot facing for bronze, iron & steel flanges
SP-25 - Standard marking system for valves, fittings, flanges & unions
SP-42 - Class 150 corrosion resistant gate, globe, angle, & check valves with flanged & buttweld ends
SP-44 - Steel pipeline flanges
SP-45 - Bypass & drain connections
SP-51 - Class 150/w corrosion resistant cast flanges & flanged fittings
SP-53 - Quality standard for steel castings & forgings for valves, flanges, & fittings & other piping components: magnetic particle exam method
SP-54 - Quality standard for steel castings for valves, flanges, & fittings and other piping components: radiographic examination method
SP-55 - Quality standard for steel castings for valves, flanges other piping components-visual method for evaluation of surface irregularities
SP-60 - Connecting flange joint between tapping sleeves & tapping valves
SP-61 - Pressure testing of steel valves
SP-65 - High pressure chemical industry flanges & threaded stubs for use with lens gaskets
SP-67 - Butterfly valves
SP-69 - ANSI/MSS edition pipe hangers & supports, selection & application
SP-70 - Cast iron gate valves, flanged & threaded ends
SP-71 - Gray iron swing check valves, flanged & threaded ends
SP-72 - Ball valves with flanged or butt-welding ends for general service
SP-79 - Socket-welding reducer inserts
SP-81 - Stainless steel, bonnetless, flanged knife gate valves
SP-82 - Valve pressure testing methods
SP-84 - Valves - socket welding & threaded ends
SP-85 - Cast iron globe & angle valves, flanged & threaded ends
SP-86 - Guidelines for metric data in standards for valves, flanges, fittings & actuators
SP-88 - Diaphragm valves
SP-91 - Guidelines for manual operation of valves
SP-92 - MSS valve user guide
SP-93 - Quality standard for steel castings & forgings for valves, flanges & fittings & other piping components-liquid penetrant exam method
SP-94 - Quality standard for ferritic & martensitic steel castings for valves, flanges, & fittings and others piping components - ultrasonic exam method
SP-96 - Guidelines on terminology for valves & fittings
SP-98 - Protective coatings for the interior of valves, hydrants, & fittings
SP-99 - Instrument valves
SP-101 - Part-turn valve actuator attachment-flange and driving component dimensions & performance characteristics
SP-102 - Multi-turn valve actuator attachment: flange and driving component dimensions & performance characteristics
SP-110 - Ball valves threaded, socket-welding, solder joint, grooved, & flared ends
SP-117 - Bellows seals for globe & gate valves
SP-118 - Compact steel globe and check valves-flanged, flangeless, threaded & welding ends (chemical & petroleum refinery service)
SP-120 - Flexible graphite packing system for rising stem steel valves (design requirements)
SP-121 - Qualification testing methods for stem packing for rising stem steel valves

Terms & Conditions

Quotation Validity

This quotation is valid for 30 days from the date quotation is sent. Validity on special metals, including Stainless Steel, is 14 days from the date the quotation is sent. All products offered from stock are subject to prior sale.

Shipments

All items quoted are EXW our Dock - (Ex Works - SCV Valve Facility Sante Fe, Texas 77510) - unless otherwise noted and agreed to in writing. Shipment may be billed either third party billing to the buyer or freight collect. Shipment dates offered above are forecasted delivery lead times and are estimated from the date payment terms (acceptable to seller) are established, clarification is received on all technical information, and resolution of customer's written approval of drawings is received (when required). The equipment quoted shall be packed in accordance with seller's standard packing procedure unless otherwise noted and agreed to in writing by the seller.

Force Majeure

If in the case of an act of God, war, riot, fire, explosion, flood, or any other circumstances of whatsoever nature which are beyond the control of the seller and which in any way affect the ability of the seller to fulfill its delivery obligations, the delivery is hindered, impeded, or delayed the seller shall be exonerated from all responsibilities and reserves the right to postpone the delivery beyond the original schedule.

Payment terms

All terms are to be negotiated. Credit cards accepted (Master Card, Visa, American Express).

Purchase Orders

All buyer's purchase orders supplied to the seller are to be written in the English language.

Prices

All prices quoted are in USD as per the preceding pricing schedule. The minimum order value is $5,000.00 (five thousand dollars), unless otherwise agreed to by seller. If for some reason any items are changed or additions to the order required, seller reserves the right to adjust prices accordingly. All sales are subject to approval of seller's credit department. If buyer fails to meet the agreed upon and established commercial terms of the contract, the seller may with-hold all subsequent deliveries until such time that the original commercial terms of the contract have been met by the buyer (or subsequent commercial terms have been agreed upon by the seller with the buyer).

Intellectual Property

All specifications, illustrations, drawings, certificates, and other particulars supplied by seller remain the intellectual property of the seller and should not be disclosed to any third party without the prior written consent of seller.

Governing Law; Arbitration; Jurisdiction

The terms and conditions of this quotation and any subsequent purchase order shall be construed, interpreted, and performed exclusively according to the laws of the State of Texas, USA. The courts of such state shall have exclusive jurisdiction out of all controversies arising out of or in connection with this agreement. The parties consent that process may be served upon them in any such action by registered mail at the address stated for Buyer on its purchase order, and upon SCV Valve at the address noted above in Santa Fe, Texas, or personally within or without the State of Texas. Any legal action with respect to any agreement must be commenced within one year after the cause of action has accrued. The provisions of the Uniform Commercial Code as adopted by the State of Texas, and not under the United Nations Convention on Contracts for the International Sale of Goods, shall apply.

Warranty

All seller's products are guaranteed against defects in workmanship for a period of twelve (12) months after being placed in service, but not exceeding eighteen (18) months after shipment, when products are properly installed per seller specifications and used within the service and pressure range for which they were manufactured. Full risk of loss shall pass to the buyer upon delivery at FOB point, or destination port in case of CIF. This guarantee is limited to the replacement of any valve parts/components found to be defective either in material or workmanship. This guarantee does not extend to costs of labor, freight, or any other consequential charges. The unauthorized use of third party components and workmanship in seller's products voids this warranty.

Limitation of Liability

The liability of the seller under this agreement or with respect to any products supplied or services performed pursuant to this agreement, whether in contract, in tort, in strict liability or otherwise, shall not exceed the purchase price paid by the buyer with respect thereto. In no event will the seller be liable in contract, in tort, in strict liability or otherwise for any special, indirect, incidental, or consequential damages. This is including but not limited to loss of anticipated profits or revenues, loss of use, non-operation or increased expense of operation of equipment, cost of capital, or claims from customer or buyer for failure or delay in achieving anticipated profits or products.

Cancellation

No contract may be canceled by the buyer except upon written notice to seller and upon payment to seller of all costs incurred by the contract arising out of, or in connection with, the contract. Export of goods covered hereby is subject to United States Customs Control. Standard stocking items will be subject to a twenty-five percent (25%) restocking and/or cancellation charge. Non-standard stocking items will be subject to a one-hundred percent (100%) restocking and/or cancellation charge.

Cancellation Charge

The following indicates the rates of cancellation charge of contract value for project manufactured items and/or special engineered items at various stages of production:

- **Time of cancellation: Order Acknowledgement and prior to Engineering engagement.** — **Cancellation Charge: 10%**
- **Time of cancellation: After start of engineering but prior to release to production.** — **Cancellation Charge: 30%**
- **Time of cancellation: After release to production but prior to completion of fabrication.** — **Cancellation Charge: 80%**
- **Time of cancellation: After completion of fabrication.** — **Cancellation Charge: 100%**

Return of Goods

No product shall be returned to seller without written authorization and shipping instructions having been obtained from seller. Products authorized for returns are to be shipped freight pre-paid to the SCV Valve Facility identified in writing, unless otherwise notified, and are subject to seller's standard re-stocking fees.

Documentation

MTR's are available at no charge upon request. The seller's standard document package is per ISO 10474 3.1B requirements. Additional requested documentation is subject to charge.

Inspection

The customer or his authorized representative may, with four (4) weeks prior notice given to seller, visually inspect products manufactured by seller. Such seller approved inspections will be carried out in accordance with seller's standard or seller approved customer inspection procedures. If any inspection or documentation requested by the customer is over and beyond the scope and criteria initially agreed to by the seller, any costs incurred by conducting such inspection or preparation of special documents shall be paid by the buyer prior to release of the items for shipment.

Witness Hydro-testing

Witness hydro-testing is available at a cost. A scope of buyers inspection request is to be provided to seller at order placement. Late notice of such requested inspection is subject to additional costs. The cost associated with such witness hydro request is to be agreed on prior to any such testing taking place. Payment of this type of testing to be negotiated. Additionally, any costs associated with a third party inspector will not be at the sellers expense.

The SCV valve brand was established in 1972 as a maintenance and modification company with the ability to provide full in-line valve service and repair. In the mid-1970's, after experiencing many shortcomings of other valve products in the industry, the first SCV valve was manufactured. Since that time, the SCV brand has been expanded its manufactured products to cover a broad range of valves. Industries served include the power, paper and pulp, oil and gas, and petro-chemical sectors.

SCV Valve takes sincere pride in our ability to manufacture both commodity and specialty valves that meet and exceed the needs of our customers. All sizes, pressure classes, and metallurgical compositions are managed in house utilizing the strictest quality control measures to ensure the customer's total satisfaction.

SCV Valve products include thru conduit gates, trunnion mounted balls, floating balls, wedge gates, full port swing checks, piston checks, and lubricated plugs. Valves utilized throughout the industry must meet rigorous quality and production standards.
SCV Valve has earned its API 6A, API 6D, ISO: 9001, CE-PED, and CRN certifications while operating under the API Q1 Quality Management System.

With years of dedication and commitment to quality, design, and service, SCV Valve has grown to be one of the premier valve manufacturers in the industry with the largest inventory of high pressure ball, gate, and check valves. We pride ourselves on our high quality products, timely delivery capabilities, and competitive prices.

On behalf of all of the members at SCV Valve, we thank you for the opportunity to earn your business.

Sincerely,

Sid McCarra
President
SCV Valve, LLC

Since 1972, the SCV brand has been committed to providing quality flow control products to the Power, Paper & Pulp, Oil & Gas, and Petro Chemical industries.

As one of the largest valve manufacturers, SCV Valve's reputation is unparalleled for producing high quality commodity and specialty valves. Products range in sizes 1/2" - 48", in pressure classes from 150# - 2500# and are backed by timely deliveries and competitive prices.

Call SCV today at (281)482-4728 for all your valve needs or visit us on the web @ www.scvvalve.com.

SALES, PROJECTS, ENGINEERING, MANUFACTURING, & WAREHOUSING
3521 FM 646 Rd. North
Santa Fe, TX 77510
Phone: (281) 482-4728
Fax: (281) 482-9728
Hours: 8:00 a.m. to 5:00 p.m. Central Standard
Email: sales@scvvalve.com

SCV VALVE

(281) 482-4728 · www.scvvalve.com

Rev: SCVRSB - 122923